Features

- System Board for HIMA, HIMax
- For 32-channel card X-DO 32 01 (DO)
- For 32 modules
- Recommended module: HiC2873 (DO)
- 24 V DC supply
- Hazardous area: spring terminals, blue
- Safe area: HIMA system connector, 96-pin

Function

The function of the Termination Board and the connector pin assignment is exactly fitted to the requirements of HIMA system.

The signal is output to the process control system via the system connector.

Information about missing supply voltage of the isolated barriers is available for the system as volt-free contact. Wiring errors from field will be reported via the same relay contact if the isolated barriers support this function.

The Termination Board has a robust glass fiber reinforced plastic housing.

The Termination Board is mounted in the switch cabinet on a 35 mm DIN mounting rail according to EN 60175.

Assembly

Connection

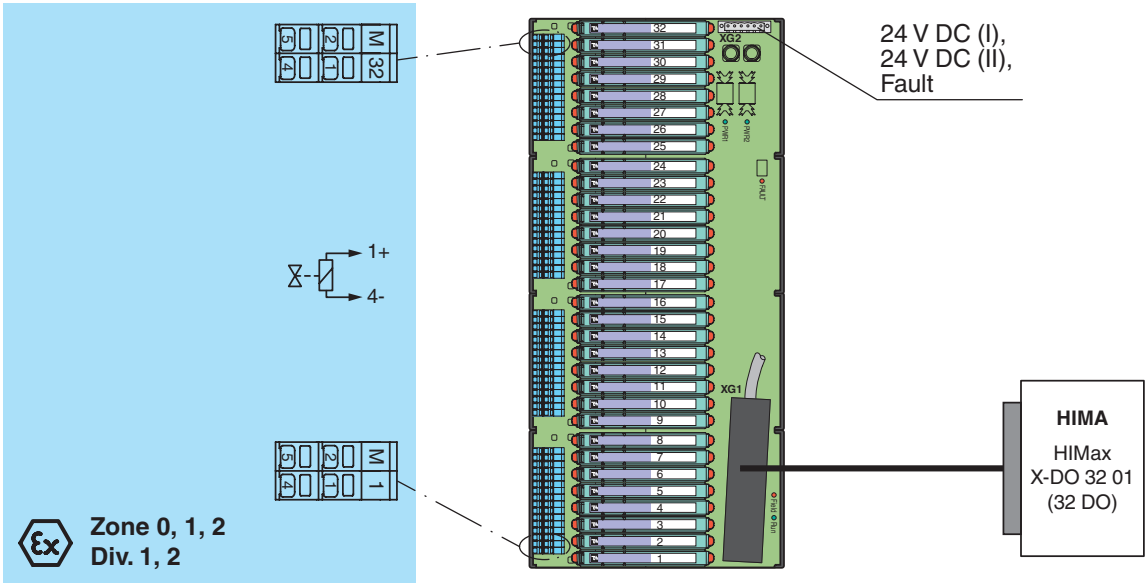

Release date 2015-05-05 15:18 Date of issue 2015-05-05 269892_eng.xml

Supply	
Connection	XG2: terminals 1, 3 (+); 2, 4 (-)
Rated voltage U_n	24 V DC , in consideration of rated voltage of used isolated barriers
Voltage drop	0.9 V , voltage drop across the series diode on the Termination Board must be considered
Ripple	≤ 10 %
Fusing	4 A , in each case for 32 modules
Power loss	≤ 500 mW , without modules
Reverse polarity protection	yes
Redundancy	
Supply	Redundancy available. The supply for the modules is decoupled, monitored and fused.
Error message output	
Connection	XG2: terminals 5, 6
Output type	volt-free contact
Contact loading	30 V DC, 1 A
Indicators/settings	
Display elements	LED PWR1 (Termination Board power supply), green LED LED PWR2 (Termination Board power supply), green LED LED FAULT (fault indication), red LED - LED lits: power supply failure - LED flashes: module failure LED Run, green LED - The HIMax I/O module is supplied with power and is connected to the Termination Board (FTA) via a system cable. LED Field, red LED - The HIMax I/O module detects faults in the connection between HIMax I/O module and Termination Board (FTA).
Directive conformity	
Electromagnetic compatibility	
Directive 2004/108/EC	EN 61326-1:2013
Conformity	
Electromagnetic compatibility	NE 21:2012 For further information see system description.
Degree of protection	IEC 60529:2001
Ambient conditions	
Ambient temperature	-20 ... 60 °C (-4 ... 140 °F)
Storage temperature	-40 ... 85 °C (-40 ... 185 °F)
Mechanical specifications	
Degree of protection	IP20
Connection	hazardous area connection (field side): spring terminals, blue safe area connection (control side): HIMA system connector, 96-pin power supply connection: pluggable spring terminals, black
Core cross-section	0.25 ... 1.5 mm^2 (24 ... 16 AWG)
Material	housing: polycarbonate, 10 % glass fiber reinforced
Mass	approx. 1300 g
Dimensions	432 x 200 x 163 mm (17 x 7.9 x 6.42 in) , height including module assembly
Mounting	on 35 mm DIN mounting rail acc. to EN 60715:2001
Data for application in connection with Ex-areas	
EC-Type Examination Certificate	CESI 06 ATEX 022 , for additional certificates see www.pepperl-fuchs.com
Group, category, type of protection	Ex II (1)G [Ex ia Ga] IIC Ex II (1)D [Ex ia Da] IIIC Ex I (M1) [Ex ia Ma] I
Safe area	
Maximum safe voltage	250 V (Attention! U_m is no rated voltage.)
Electrical isolation	
Field circuit/control circuit	safe electrical isolation acc. to IEC/EN 60079-11, voltage peak value 375 V
Directive conformity	
Directive 94/9/EC	EN 60079-0:2012+A11:2013 , EN 60079-11:2012 , EN 60079-26:2007 , EN 50303:2000
International approvals	
UL approval	
Control drawing	116-0327
IECEx approval	IECEx CES 06.0003
Approved for	[Ex ia Ga] IIC [Ex ia Da] IIIC [Ex ia Ma] I
General information	

Release date 2015-05-05 15:18 Date of issue 2015-05-05 269892_eng.xml

Supplementary information	EC-Type Examination Certificate, Statement of Conformity, Declaration of Conformity, Attestation of Conformity and instructions have to be observed where applicable. For information see www.pepperl-fuchs.com.
Accessories	
Designation	optional accessories: Label Carrier HiALC-Hi*TB-SET-1**

Release date 2015-05-05 15:18 Date of issue 2015-05-05 269892_eng.xml

Application

Typical loop

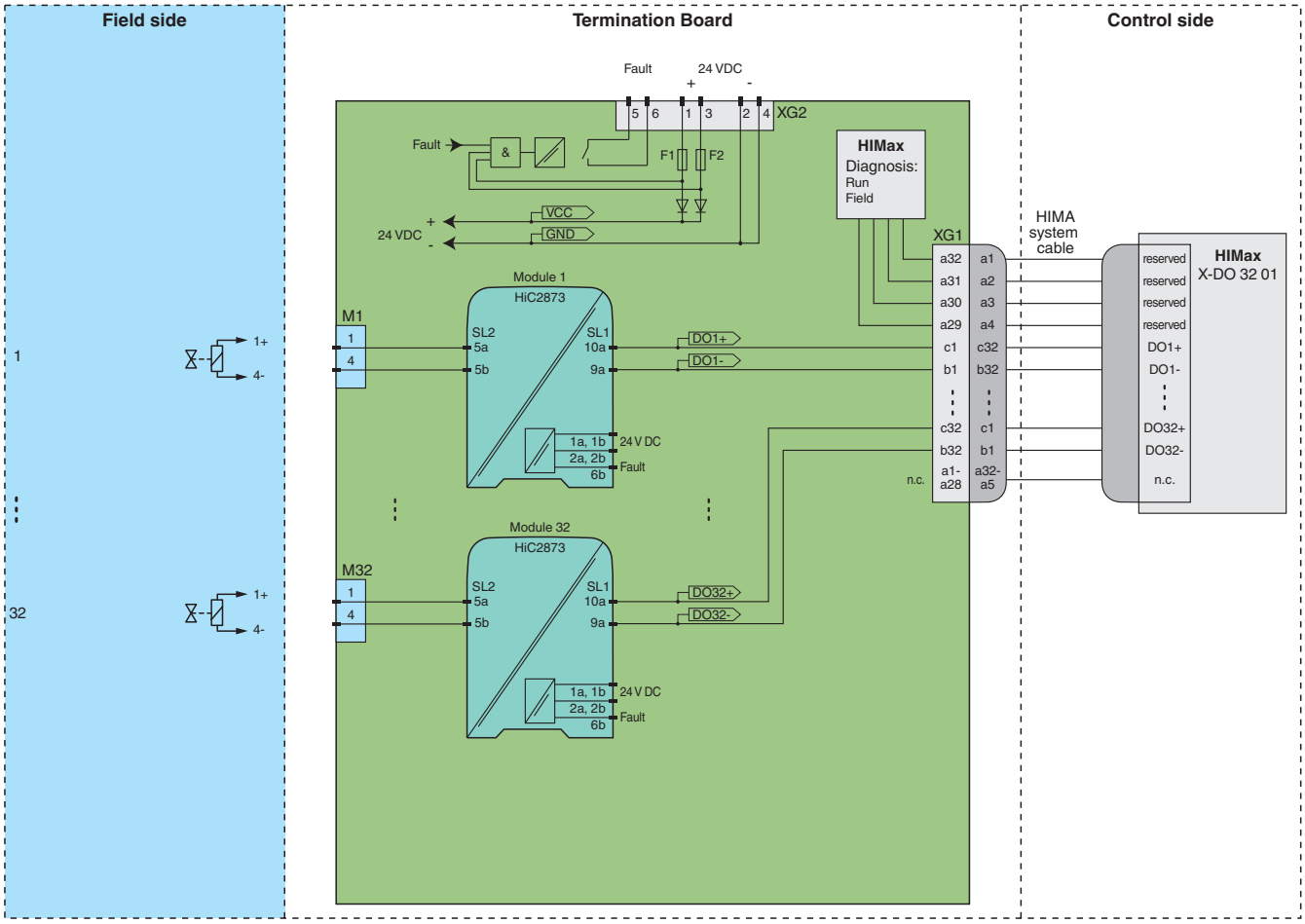

Module switch settings

Type	DIP switch	Position
HiC2873 (DO) • Bus powered • Control input: logic signal • Line fault detection enabled • Filter enabled	S1	ON
	S2	OFF
	S3	ON
	S4	OFF
	S5	ON
	S6	ON
	S7	ON
	S8	ON

The pin-out configuration has to be observed. For information see corresponding pin-out table on www.pepperl-fuchs.com.

Release date 2015-05-05 15:18 Date of issue 2015-05-05 269892_eng.xml